SPECIFICATION APPLIED

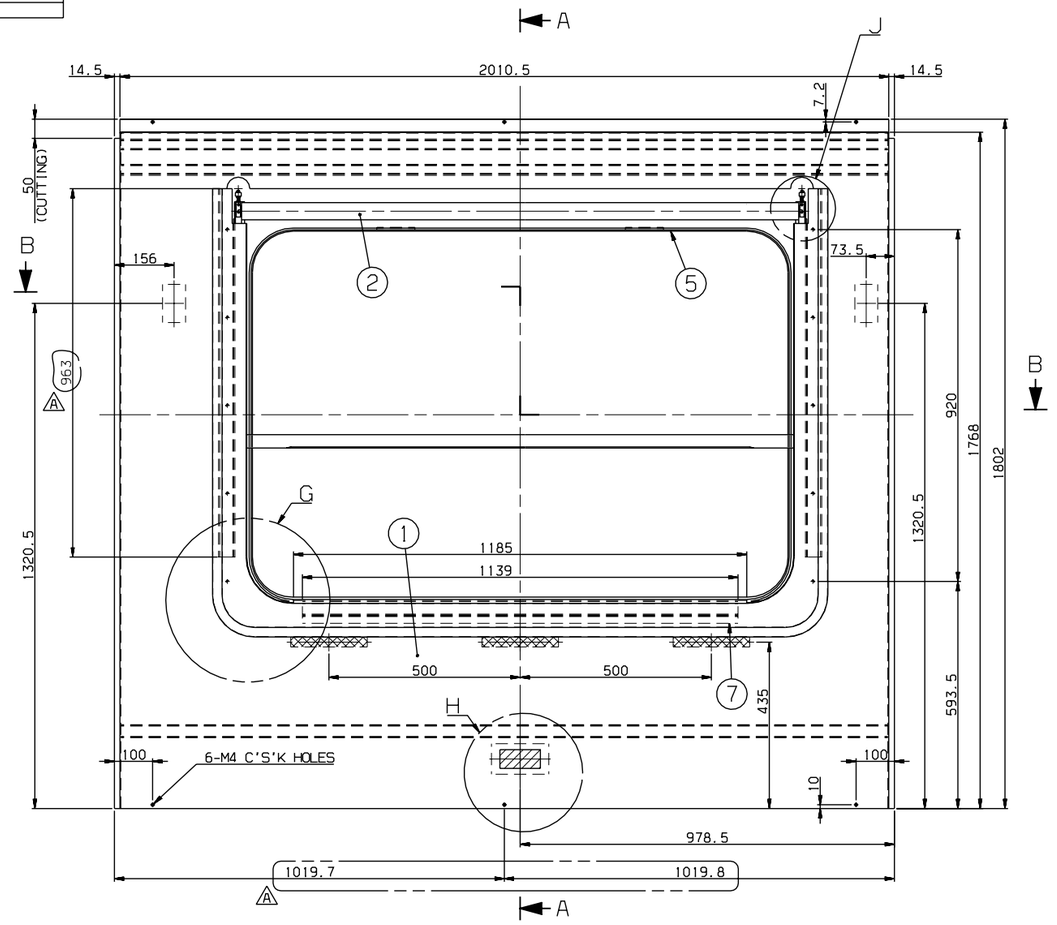

SECTION B-B

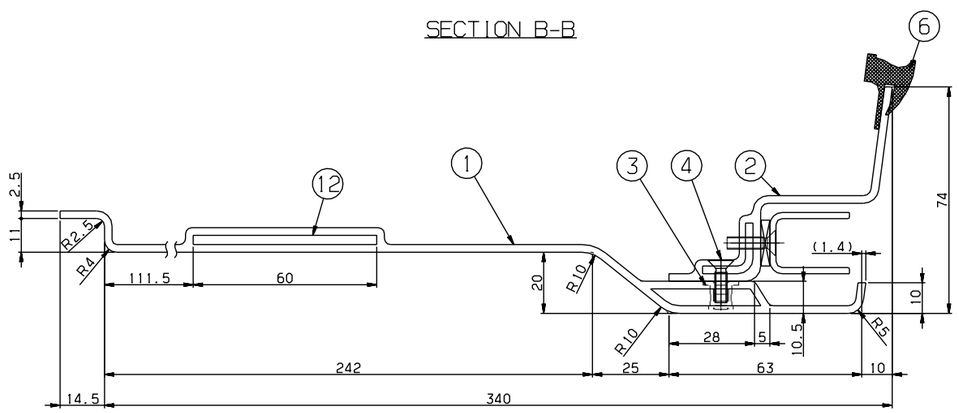

DETAIL F
SCALE=1/1

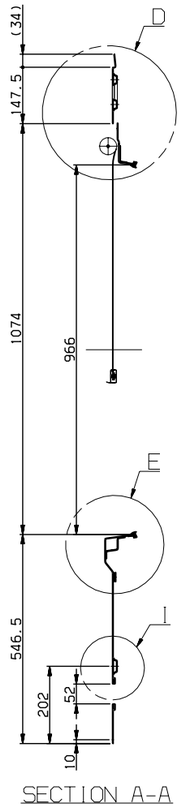

SECTION A-A

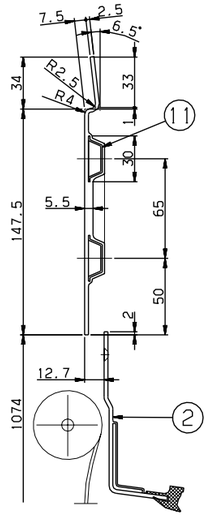

DETAIL D
SCALE=1/2

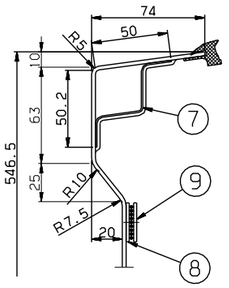

DETAIL E
SCALE=1/2

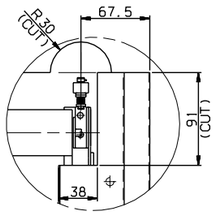

DETAIL J
SCALE=1/3

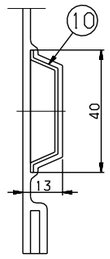

DETAIL I
SCALE=1/1

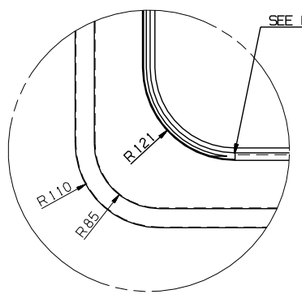

DETAIL G
SCALE=1/4

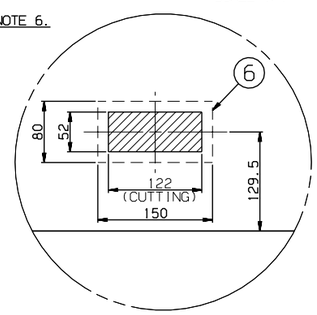

DETAIL H
SCALE=1/4

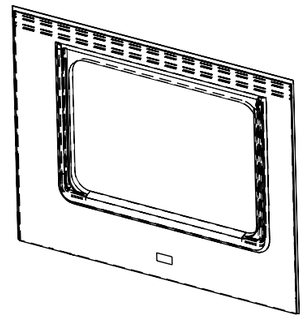

ISO VIEW

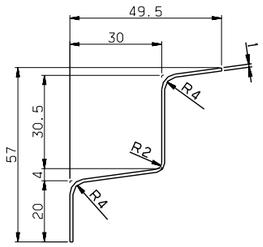

DETAIL #7
SCALE=1/1

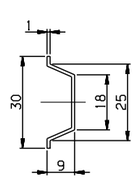

DETAIL #11
SCALE=1/1

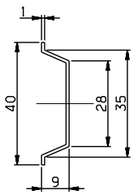

DETAIL #10
SCALE=1/1

NOTE

1. AN INTERIOR PANEL'S COLOR(RAL 7047) AND SURFACE SHALL BE MANUFACTURED AFTER SAMPLE'S APPROVAL BY CUSTOMER
2. PART 5 SHALL BE CUT ADEQUATELY AND USED
3. PART 2 SHALL BE WELL OPERATED UNDER CONDITION OF ASSEMBLY
4. PART 8 SHALL BE FIXED ON THE PART 1, AND PART 9 SHALL BE DELIVERED SEPERATETLY
5. THE INTERFACE BETWEEN PART 1 AND PART 2 SHALL BE STRONGLY SEALED
6. ⚠6 PART 4 SHOULD BE APPLIED WITH PART 13.

	NO.	PART NO.	DESCRIPTION	MATERIAL	Q'TY	V.T	REMARKS
⚠	13	CP910004-406	ADHESIVE	ASSY	1		LOCTITE 242
	12	RFP51115EJ0-012	SEAT,TAP	SUS304	2		PL T3x100x60
	11	RFP51115EJ0-011	STIFFENER	A1050P	2		T1
	10	RFP51115EJ0-010	STIFFENER	A1050P	1		T1
	9	RFP51115EJ0-009	DUAL_LOCK,FASTENER	ASSY	3		3M,SJ-3550 L=200(DUAL TAPE)
	8	RFP51115EJ0-008	DUAL_LOCK,FASTENER	ASSY	3		3M,SJ-3551 L=200(DUAL TAPE)
	7	RFP51115EJ0-007	STIFFENER	SUS304	1		T1,L=1135
	6	RFP51115EJ0-006	SEAT,TAP	SUS304	1		PL T3x150x80
	5	RFP51115EJ0-005	RUBBER,SECTION	ASSY	1		RFP51011ANO,L=4600
	4	RS60607-098S	SCREW,F.H	SUS304	10		M4x14
	3	RFP51115EJ0-003	NUTSERT	SUS304	10		M4
	2	RFP51201EJ0	PANEL,BLIND WINDOW,B	ASSY	1		
	1	RFP51115EJ0-001	PANEL	FRP	1		T2.5

기호 MARK	일자 DATE	내용 DETAIL OF REVISION(E.C ZONE)	참변번호 E.C NO.	설계 DGN	검도 CHK	승인 APP
Ax4	2014.12.18	ADDED PART NO.⚠13 & DIMENSION	RSD1402-U071	H.U.LEE	K.B.PARK	J.Y.LEE

일반공차 GENERAL TOLERANCE			
절삭가공 MACHINING (±)			
등급 GRADE	A	B	C
~ 6	0.05	0.1	0.2
~ 30	0.1	0.2	0.5
~ 120	0.15	0.3	0.8
~ 315	0.2	0.5	1.2
~ 1000	0.3	0.8	2.0
주조공차 CASTING (±)			
등급 GRADE	A	B	
~ 40	2	4	
~ 30	2	3	
~ 10	1	1.5	
용접 WELDING (±)			
등급 GRADE	A	B	C
~ 20M	-	6.0	8.0
~ 15M	-	5.0	7.0
~ 12M	-	4.0	6.0
~ 8M	-	3.0	5.0
~ 4M	0.8	2.0	4.0
~ 2M	0.5	1.2	3.0
~ 1M	0.3	0.8	2.0
~ 315	0.2	0.5	1.2
~ 120	0.15	0.3	0.8
~ 30	0.1	0.2	0.5
2~6	0.05	0.1	0.2
등급 GRADE	A	B	C

승인 APP	검도 CHK	설계 DGN
JeongYul Lee 2014.10.14	KeongBong Park 2014.10.14	HeonUk Lee 2014.10.14

재질 MAT'L	중량 G.W
ASSY	

일반공차	MC	VD	CT
	B	B	B

SIZE A1

제도 DRG: HeeSook Jeong 2014.10.14

명칭 TITLE: WINDOW,MASK,TYPE K

도면 번호 DRG. NO: RFP51115EJ0 | MS | Ver. 00 | Rev. -A

SCALE 1/8 | SHEET 1 of 1

RSD1402 | RFP- | 년-PRJT | 심리분숨

참고문헌 REF. NO.

HYUNDAI Rotem 현대로템주식회사

본 도면은 당사 재산권과 회사권리 무단복사/배포 금지됨. PROPERTY OF ISSUING ENTITY. CANNOT BE DISTRIBUTED OR REPRODUCED WITHOUT AUTHORIZATION.

CATIA